LC4021 40 characters x 2 lines

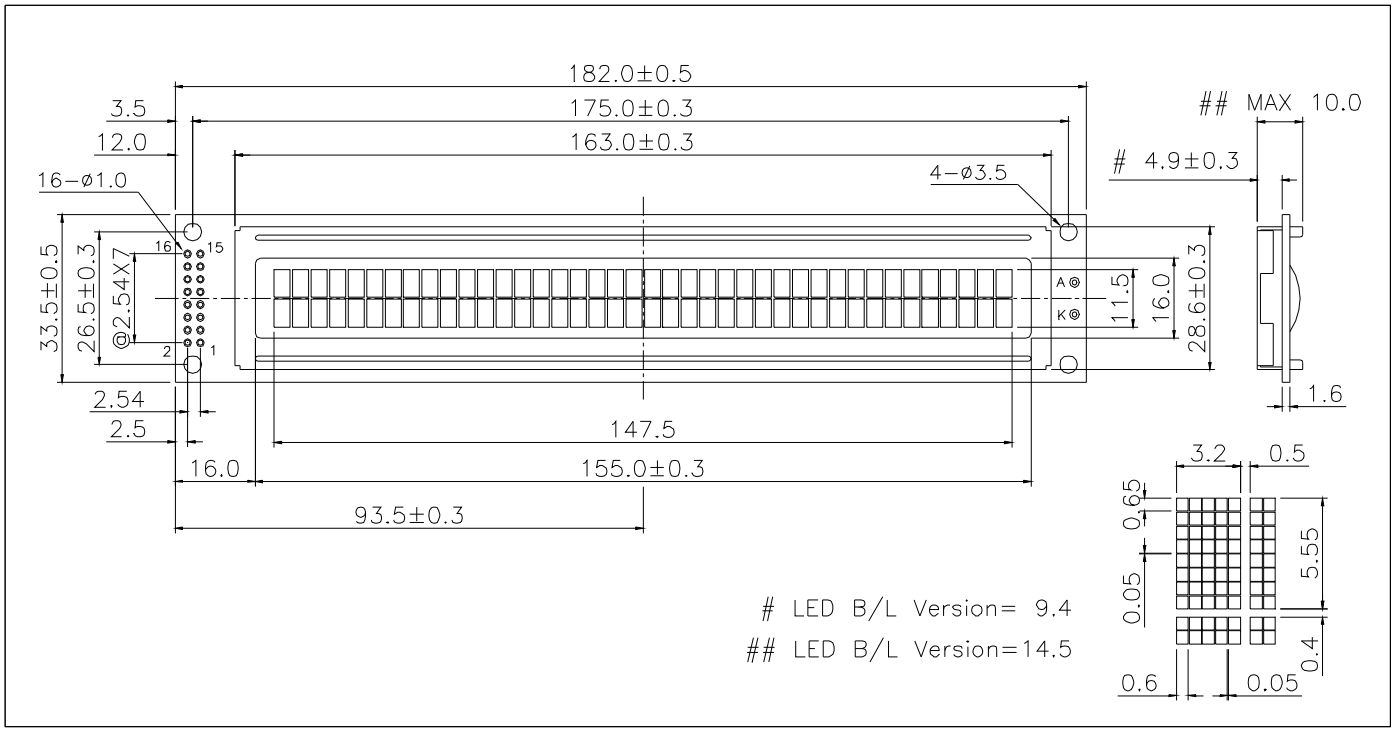

ABSOLUTE MAXIMUM RATINGS

Item	Symbol	Min.	Max.	Unit
Supply Voltage(Logic)	V_{DD} - V_{SS}	-0.3	7.0	V
Supply Voltage(LCD)	V_{DD} - V_O	-0.3	13.0	V
Input Voltage	V_I	-0.3	V_{DD} + 0.3	V
Operating Temp.	T_{opr}	-20	70	°C
Storage Temp.	T_{stg}	-30	80	°C

MECHANICAL DATA

Item	Nominal Dimensions	Unit
Module Size (W x H x T)	182.0 x 33.5 x 10.0/14.5	mm
Viewing Area (W x H)	155.0 x 16.0	mm
Character Size (W x H)	3.2 x 5.55	mm
Dot Size (W x H)	0.6 x 0.65	mm
Weight (Reflective/LED)	Approx. 65 / 90	g

ELECTRICAL CHARACTERISTICS (V_{DD}=5V±0.25V)

Item	Symbol	Test Condition	Min.	Typ.	Max.	Unit
Input High Voltage	V_{IH}	--	2.2	--	V_{DD}	V
Input Low Voltage	V_{IL}	--	- 0.3	--	0.6	V
Output High Voltage	V_{OH}	I_{OH} = - 0.2mA	2.4	--	V_{DD}	V
Output Low Voltage	V_{OL}	I_{OL} = 1.2mA	0	--	0.4	V
Supply Current	I_{DD}	V_{DD} = 5.0V	--	2.0	5.0	mA
LCD Driving Voltage	V_{DD} - V_O	Ta=25°C	--	4.6	--	V

PIN CONNECTIONS

Pin	Symbol	Level	Function
1	V_{SS}	0V	GND
2	V_{DD}	+5V	Power supply for logic
3	V_O	--	Operating voltage for LCD
4	RS	H/L	H : Data L : Instruction code
5	R/W	H/L	H : Read L : Write
6	E	H,H→L	Enable signal
7	DB0	H/L	In 8-bit bus mode, used as low order bidirectional data bus. In 4-bit bus mode, open these pins.
8	DB1	H/L	
9	DB2	H/L	
10	DB3	H/L	
11	DB4	H/L	In 8-bit bus mode, used as high order bidirectional data bus. In 4-bit bus mode, used as both high and low order data bus.
12	DB5	H/L	
13	DB6	H/L	
14	DB7	H/L	
15	LEDA	+5V	Power supply for LED backlight
16	LEDK	0V	

BLOCK DIAGRAM

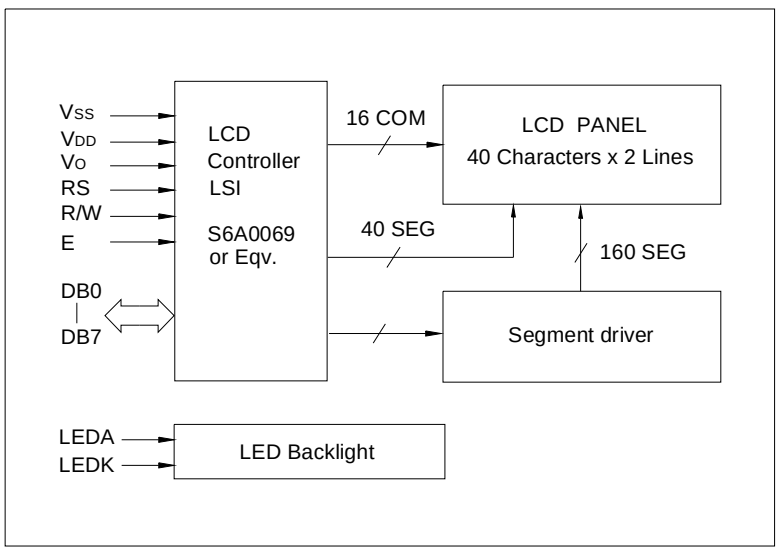

LED BACKLIGHT SPECIFICATIONS (Ta=25°C)

Item	Symbol	Typ.	Max.	Unit
Forward Voltage	V_f	4.1	4.3	V
Forward Current	I_f	250	--	mA
Emission Wave Length	λ_p	568	--	nm